MODELLO
UNO
Ref. U1-GMT-DRD

Made in Italy
2 years warranty
Limited edition of 200 pieces

UNIMATIC

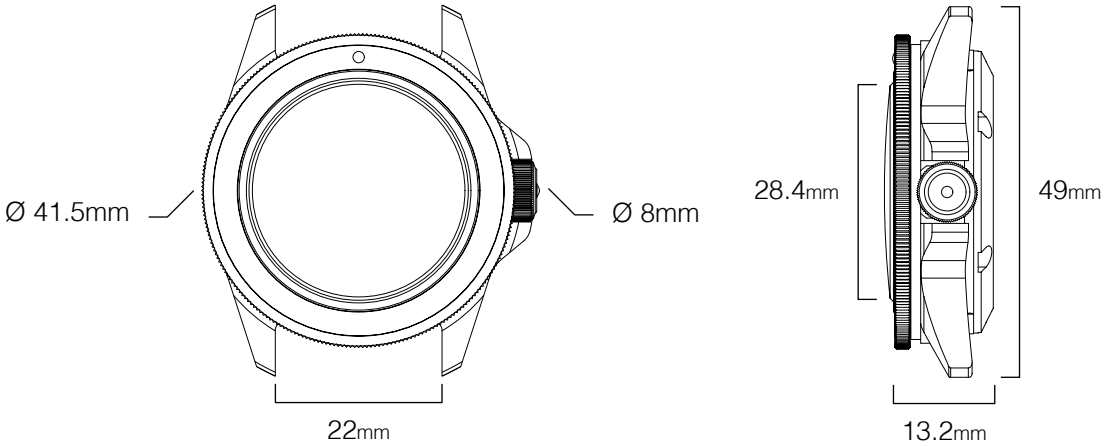

REFERENCE	Modello Uno U1-GMT-DRD
TYPE	GMT Dive watch
ORIGIN	Made in Italy
TESTING	Singularly tested for accuracy and water resistance
WATER RESISTANCE	300m ≈ 1000ft ≈30atm
EDITION	Individually numbered, edition of 200
CASE DIMENSIONS	Diameter 40mm/ 41.5mm with the bezel, height lug-to-lug 49mm, case opening 28.4mm
WEIGHT	
CASE THICKNESS	13.2mm without the lens/ 14.4mm with the lens
LUGS/ STRAP SIZE	22mm
CASE MATERIAL	316L stainless steel
CASE FINISHING	Brushed finish
BEZEL	120 clicks mono-directional safety bezel
BEZEL INSERT	Matte black ceramic
CASEBACK	Parachute screw-down caseback
CROWN	Alchemical Sun ⊙ 8mm screw-down
LENS DESCRIPTION	2.5mm thick double domed sapphire
LENS TREATMENT	Inner side anti-reflective coating
DIAL BASE	Matte taupe dial
LUMINOUS COLOR	Super-LumiNova® GL Old Radium Light
DIAL TRIMS	Matte black open second rail and dial trims
HANDS	Matte black color ladder phantom H+M, reverse lollipop S, Super-LumiNova® GL Old Radium Light tip
24 HAND	Matte black color 24H, hollow arrow tip in Super-LumiNova® GL Dark Orange
DATE	Window H6
CALIBER	Automatic caliber NH34A 21600BPH
CALIBER FEATURES	GMT function, hacking seconds hand
CALIBER JEWELS	24
CALIBER WINDING	Self-winding/ manual winding
ACCURACY	-20~+40s/ day
POWER RESERVE	More than 41h
STRAP	Sand leather two-piece quick-release strap with matching stitches
STRAP HARDWARE	Stainless steel brushed hardware signed UNIMATIC
PRODUCT KIT	UNIMATIC tough case, warranty card with unique ID seal