MODELLO
QUATTRO
Ref. U4S-NPB

Made in Italy
2 years warranty
Limited edition of 200 pieces
Swiss movement

UNIMATIC

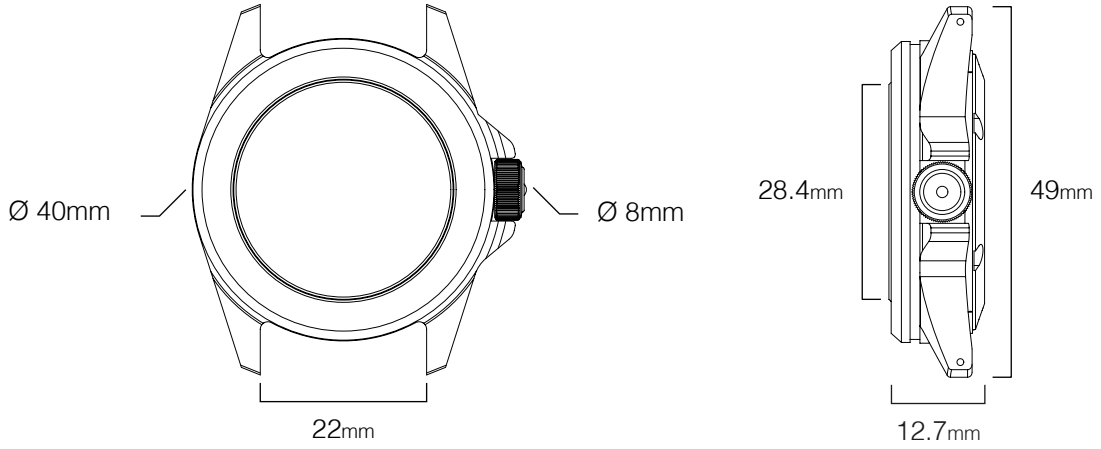

REFERENCE	Modello Quattro U4S-NPB
TYPE	Slim military watch
ORIGIN	Made in Italy
TESTING	Singularly tested for accuracy and water resistance
WATER RESISTANCE	300m ≈ 1000ft ≈30atm
EDITION	Individually numbered, edition of 200
CASE DIMENSIONS	Diameter 40mm, height lug-to-lug 49mm, case opening 28.4mm
WEIGHT	98g/ 112g with the strap
CASE THICKNESS	13.7mm without the lens/ 13.9mm with the lens
LUGS/ STRAP SIZE	Drilled lugs/ 22mm
CASE MATERIAL	316L stainless steel
CASE FINISHING	Brushed finish
CASEBACK	Langhe: Fog, Moss, Truffle caseback
CROWN	Alchemical Sun ⊙ 8mm screw-down
LENS DESCRIPTION	2.8mm thick flat sapphire
LENS TREATMENT	Inner side anti-reflective coating
DIAL BASE	Satin moss dial
LUMINOUS COLOR	Super-LumiNova® C1
DIAL TRIMS	Cool gray open second rail and dial trims
HANDS	Brushed stainless steel minimal phantom H+M, reverse lollipop S with Super-LumiNova® C1 tip
CALIBER	Automatic caliber Sellita SW200-1 b 28800BPH
CALIBER FEATURES	Hacking seconds hand
CALIBER JEWELS	26
CALIBER WINDING	Self-winding/ manual winding
ACCURACY	± 12s/ day
POWER RESERVE	Min 38h, typical 41h
STRAP/ BRACELET	Military deer leather two-piece quick-release strap
STRAP HARDWARE	Stainless steel brushed hardware signed UNIMATIC
PRODUCT KIT	UNIMATIC tough case, warranty card with unique ID seal